Research in physics education: A resource for improving student learning

Lillian C. McDermott
University of Washington

New Physics and Astronomy
Faculty Workshop
November 2013

Physics Education Group at the University of Washington

Faculty

Lillian C. McDermott
Paula Heron
Peter Shaffer

Lecturers & Post-docs

Donna Messina (K-12 teacher)
Gina Passante
Ximena Cid

Physics Ph.D. Graduates

23 (1979-2013)

Physics Ph.D. Students

Paul Emigh
Ryan Hazelton
Alexis Olsho
Brian Stephanik

Research and Teacher Education Coordinator

Nina Tosti

Our coordinated program of research, curriculum development, and instruction is supported, in part, by grants from the National Science Foundation.

Evolution of UW Physics Education Group

Early 1970's: K-12 teacher preparation

Mid 1970's: Physics Education Research *(PER)* and Ph.D. program in Department of Physics for graduate students and post-docs

1980's: Research-based development of curriculum for K-12 teachers and underprepared students aspiring to science-related careers

1990's onward: Research-based development of curriculum for

- K-12 teachers
- Undergraduates

Preparation of TAs as instructors in physics

Discipline-based research on learning and teaching

- differs from traditional education research
  (in which emphasis is on educational theory and methodology)
- focuses on student understanding of science content
- is an important field for scholarly inquiry by science faculty in science departments

can be an effective approach for improving student learning (K–20+)

Perspective on teaching as a science (as well as an art)

Results from documented research

indicate:

- many students encounter same conceptual and reasoning difficulties
- same instructional strategies are effective for many students

are:

- generalizable beyond a particular course, instructor, or institution
- reproducible

become:

- publicly shared knowledge that provides a basis for acquisition of new knowledge and for cumulative improvement of instruction

∴ **constitute:**

- a rich resource for improving instruction

Criteria for effectiveness of instruction

Teaching as an art

- Motivational effect of personal qualities and style of instructor
- Instructor's subjective assessment of student learning
- Student enthusiasm and self-assessment of learning
- Student evaluations of the course or instructor

Criteria are not tightly linked to student learning.

Teaching as a science

- *Assessment of student learning by specified intellectual outcomes*

Criterion is student learning.

Physics Education Group

Goal: ongoing cumulative improvement in

- research base on student understanding of physics
- undergraduate instruction *(introductory and beyond)*
- K-12 teacher preparation *(preservice and inservice)*
- professional development *(grad. students, post-docs, faculty)*

within culture and constraints
of research-intensive physics department

Perspective:

- Research in physics education is a science.

Physics Education Group

Procedures:

- conduct systematic investigations
- apply results (*e.g.,* develop instructional strategies)
- assess effectiveness (*e.g.,* through pre- and post-testing)
- document methods and results so that they can be replicated
- report results at meetings and in papers

The procedures are characteristic of an empirical applied science.

Systematic investigations of student learning (at the beginning, during, and after instruction)

- **individual demonstration interviews**
  - for probing student understanding in depth
- **written questions with explanations**
  (pretests and post-tests)
  - for ascertaining prevalence of specific difficulties
  - for assessing effectiveness of instruction
- **descriptive studies during instruction**
  - for providing insights to guide curriculum development

Application of research to development of curriculum

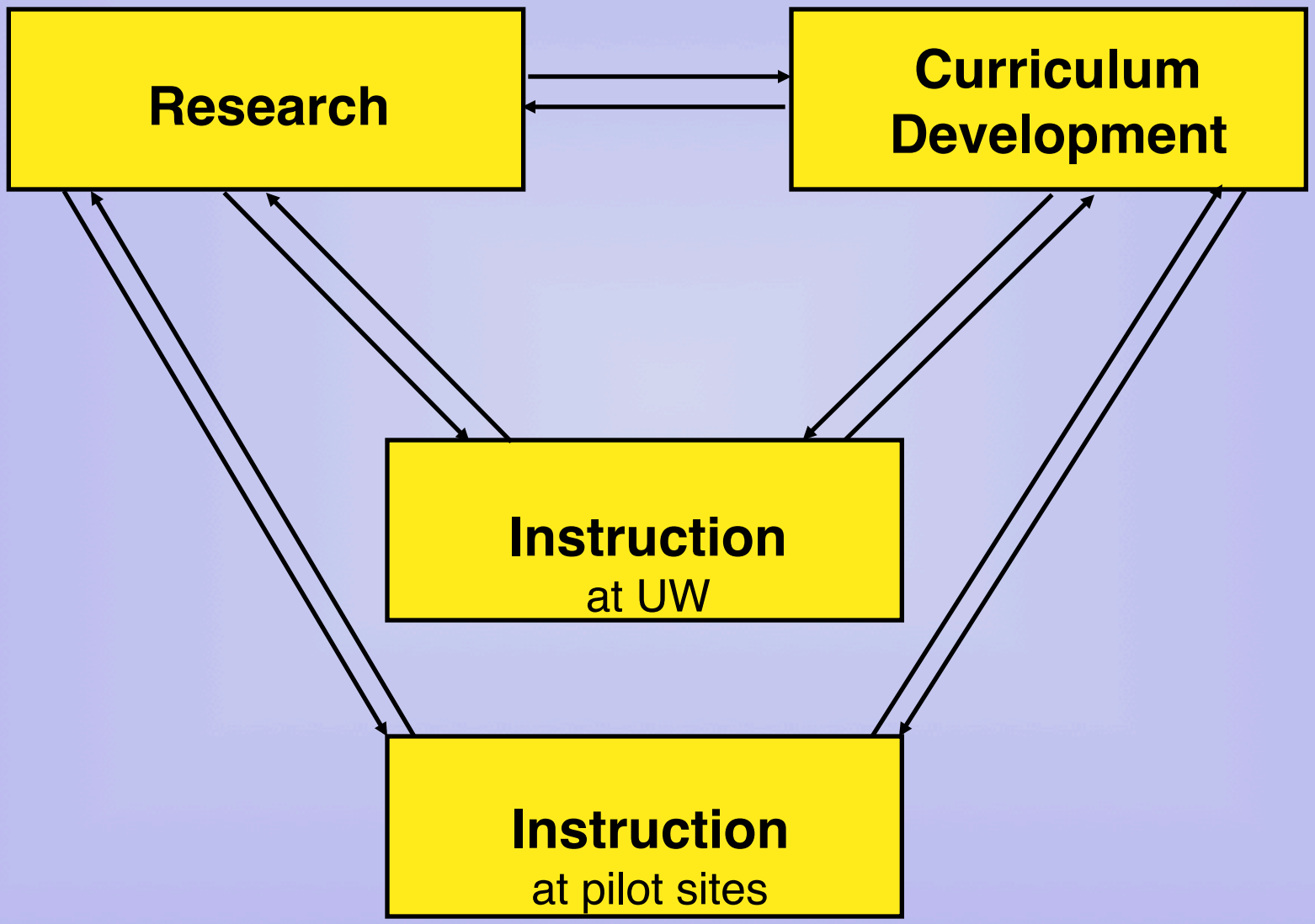

Research-based curriculum development

Preparing precollege teachers to teach physics and physical science

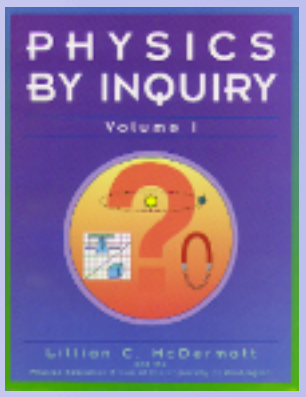

– Physics by Inquiry –

(John Wiley & Sons, Inc., 1996)

Self-contained, laboratory-based, no lectures

Improving student learning in introductory physics

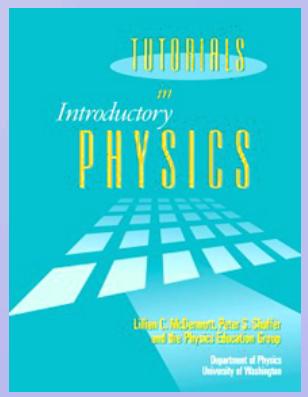

– Tutorials in Introductory Physics –

(Prentice Hall, 2002)

Supplementary to lecture-based course

Examples in three different contexts

- Geometrical Optics
  (Ray Model)

- Electric Circuits
  (Current Model)

- Mechanics
  (Mathematical Model)

- F.M. Goldberg and L.C. McDermott, “An investigation of student understanding of the real image formed by a converging lens or concave mirror,” *Am. J. Phys*. **55**(2),108 (1987).

- K. Wosilait, P.R.L. Heron, P.S. Shaffer, and L.C. McDermott, “Development and assessment of of a research-based tutorial on light and shadow,” *Am. J. Phys.* **66**(10), 966 (1988).

What students *could* do
(after standard instruction):

Solve problems algebraically and with ray diagrams

Example:

An arrow, 2 cm long, is 25 cm in front of a lens whose focal length is 17.3 cm.

Predict where the image would be located.

$$\frac{1}{S} + \frac{1}{S'} = \frac{1}{F}$$

What students could *not* do:

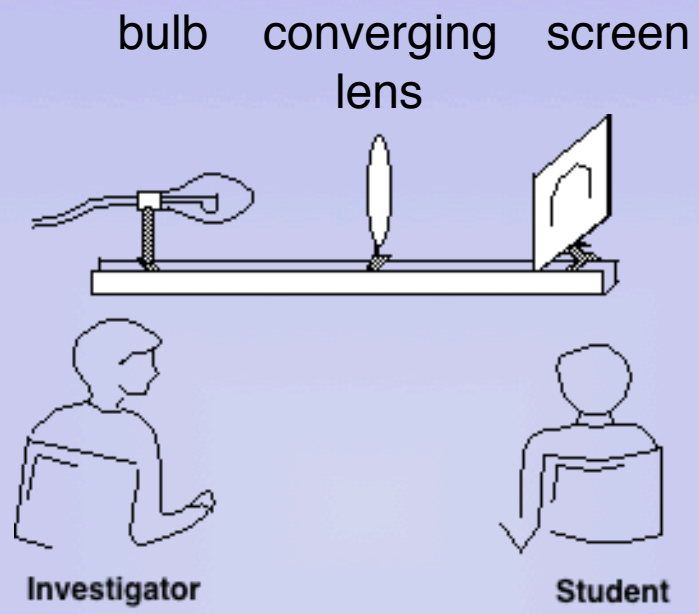

Predict effect on screen	Correct
(1) if the lens is removed	50%
(2) if the top half of the lens is covered	35%
(3) if the screen is moved toward the lens	40%

Individual Demonstration Interviews: before/after instruction

Students did not recognize that:

- Principal rays locate image but are not necessary to form it.
- Area of lens affects only brightness, not extent, of image.
- For every point on an object, there is a corresponding point on the image.

but there was a much more fundamental difficulty

Lack of a functional understanding of a basic ray model for light

- Light travels in a straight line.
- Every point on an object is the source of an infinite number of rays emitted in all directions.

What students *could not* do:

(before or after standard instruction in calculus-based physics)

Sketch what you would see on the screen.

Explain your reasoning.

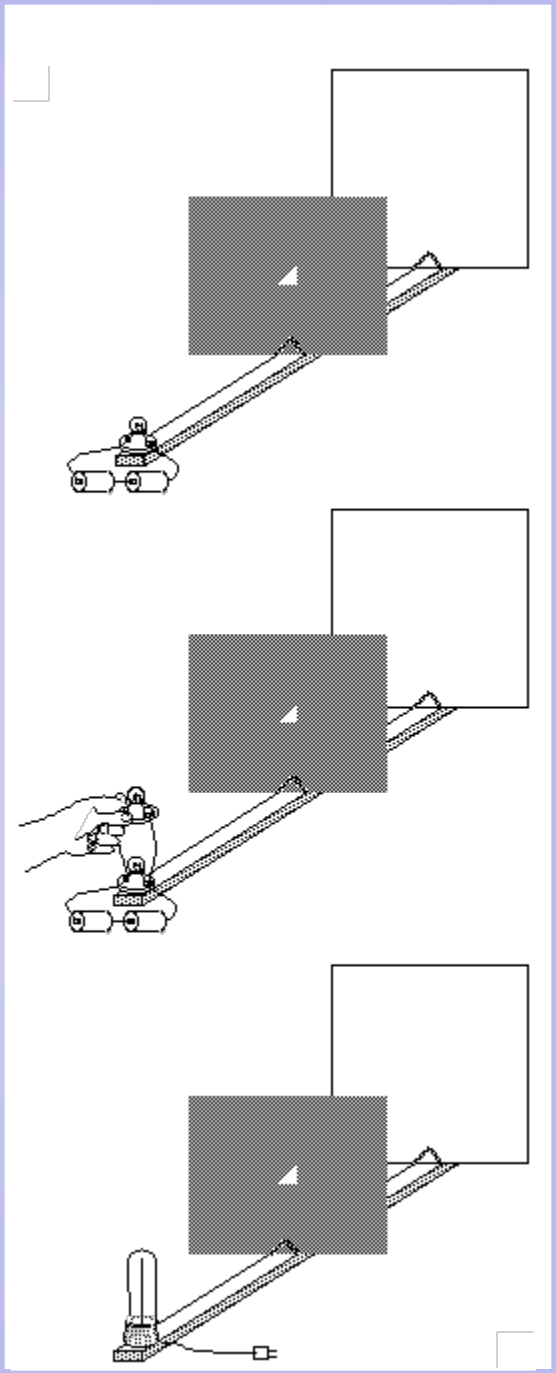

N >> 2000 university students and pre-university teachers

Correct responses

Single bulb	90%
Two bulbs	60%
Long-filament bulb	20%

About 10 years later (no lens)

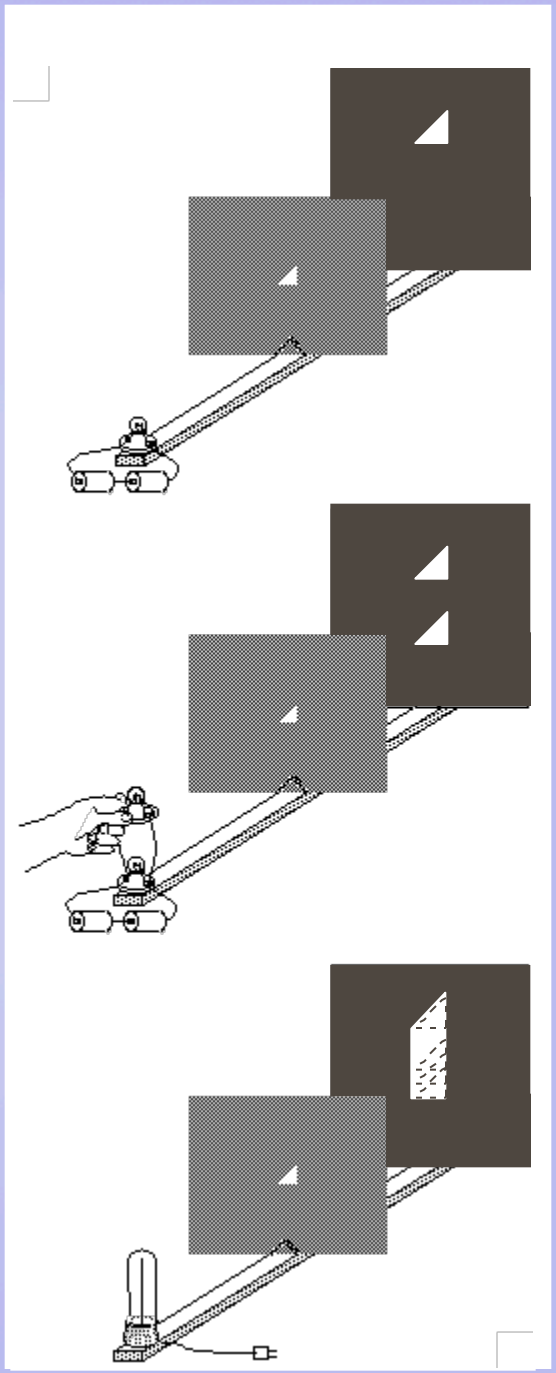

Summary of Instruction

Provide direct experience with a variety of light sources and apertures.

Guide students through reasoning required to predict shape of geometric images produced by various combinations of light sources and apertures.

Results

- Modifications led to > 75% correct on various combinations of point and extended sources.

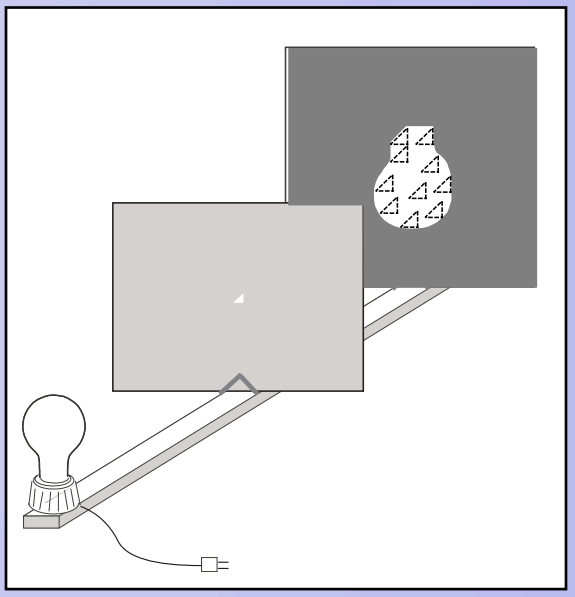

- **Critical modification**: Use of frosted bulb as the light source

- Faculty who substituted lectures with demonstrations and homework led to ~ 40% correct,

Investigation of student understanding: an example from electric circuits

- *"Research as a guide for curriculum development: An example from introductory electricity. Part I: Investigation of student understanding,"* L.C. McDermott and P.S. Shaffer, *Am. J. Phys.* **60** (1992)

- *"Research as a guide for curriculum development: an example from introductory electricity, Part II: Design of instructional strategies,"* P.S. Shaffer and L.C. McDermott, *Am. J. Phys.* **60** (1992)

- *"Preparing teachers to teach physics and physical science by inquiry,"* L.C. McDermott, P.S. Shaffer, and C.P. Constantinou, *Phys. Educ.* **35** (2000)

- *"New insights into student understanding of complete circuits and the conservation of current,"* M.R. Stetzer, P. van Kampen, P.S. Shaffer, and L.C. McDermott, *Am. J. Phys.* **81** (2013)

What students *could* do

Solve many end-of-chapter circuit problems by applying Kirchhoff's rules

What students could *not* do

The bulbs are identical. The batteries are identical and ideal.

Rank the bulbs from brightest to dimmest. Explain.

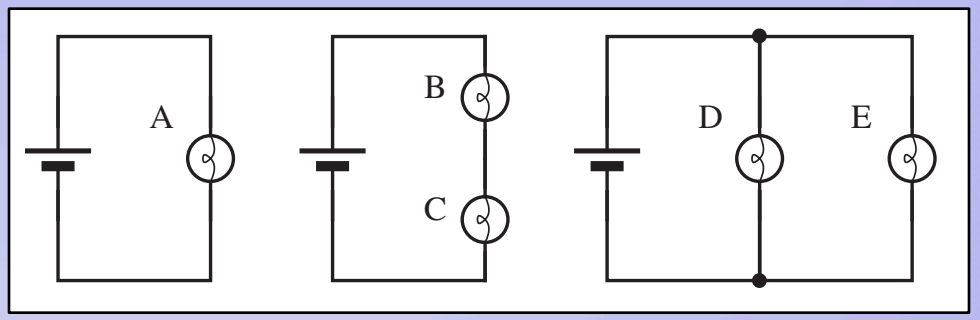

Answer: A = D = E > B = C

Correct response given by ~ 15%

- students in calculus-based physics (N > 1000)
- high school physics teachers
- university faculty in other sciences and mathematics

given by ~ 70%

- graduate TA's and postdocs in physics (N ~ 100)

Results independent of whether administered before or after instruction in standard lecture courses

Similar situation at other universities
(e.g., Harvard University; Eric Mazur)

Paired examination questions

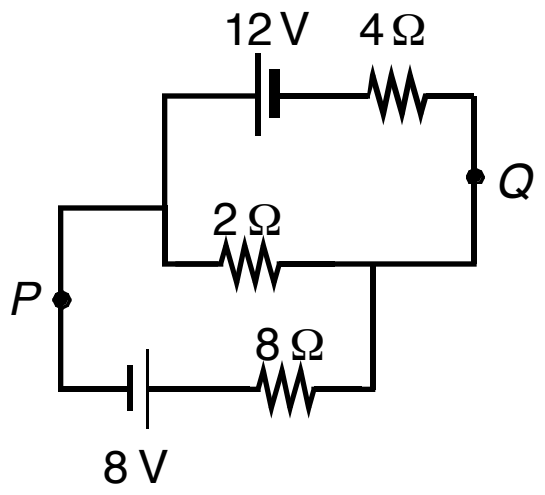

Calculate current in 2-Ω resistor and potential difference between *P* and *Q.*

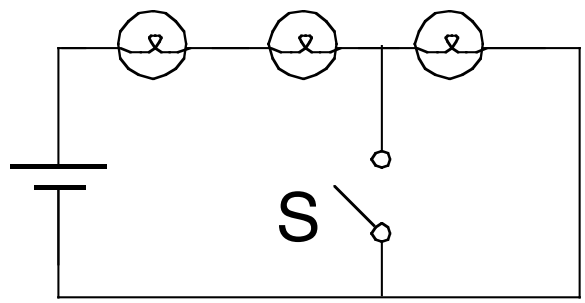

When the switch is closed, do the following *increase, decrease, or stay the same?*

- intensities
- i_{bat}
- voltage drops

Student performance substantially worse on conceptual problem.

Examples of persistent conceptual difficulties with electric circuits

- *belief that the battery is a constant current source*
- *belief that current is "used up" in a circuit*

Basic underlying difficulty

- *lack of a conceptual model for an electric circuit*

Important note:

Use of term '*misconception*' may trivialize the problem.

Concepts in physics are interrelated.

They cannot be 'fixed' in isolation.

On certain types of qualitative questions, student performance is essentially the same over a wide range of student ability:

- *before and after standard instruction*
- *in calculus-based and algebra-based courses*
- *with and without standard demonstrations*
- *with and without standard laboratory*
- *in large and small classes*
- *regardless of popularity of the instructor*

Hearing lectures, reading textbooks, seeing demonstrations, doing homework, and performing laboratory experiments often have little effect on student learning.

Evidence from research indicates a gap

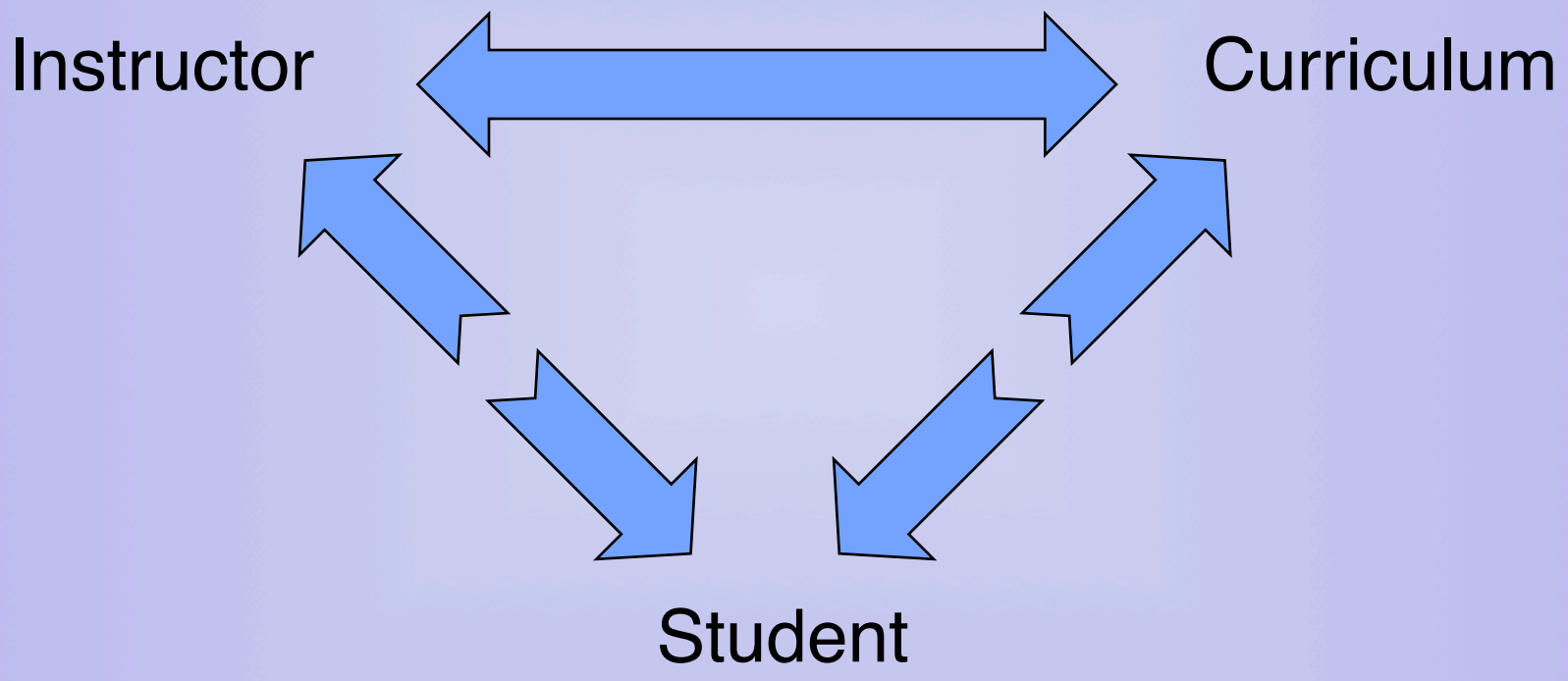

Gap greater than most instructors realize

Traditional instruction in physics:

is based on perspective of university instructors

- present understanding of physics
- belief they can “transmit” knowledge to students and teachers
- personal perception of students and teachers

ignores differences between physicists and students

- small for future physicists and some K-12 teachers
- large for most students and most K-12 teachers

As a result, students often:

– ***tend to view physics as a collection of facts and formulas***
– ***make less progress on concepts and reasoning than they could***

Need for a different instructional approach

guided inquiry

Physics by Inquiry

and

Tutorials in Introductory Physics

Instruction by guided inquiry:

an example from the *Electric Circuits* module in *Physics by Inquiry*

- Students construct a conceptual model for an electric circuit based on their observations through "hands on" experience with batteries and bulbs. *(i.e., develop a mental picture and a set of rules to predict and explain the behavior of simple circuits)*

- Questions that require qualitative reasoning and verbal explanations guide development of a functional understanding.

- Curriculum explicitly addresses conceptual and reasoning difficulties identified through research

  Example of instructional strategy: elicit, confront, resolve
  apply, reflect, generalize

Assessment of student learning

Virtually all teachers (K-12) develop a model that they can apply to relatively complicated dc circuits.

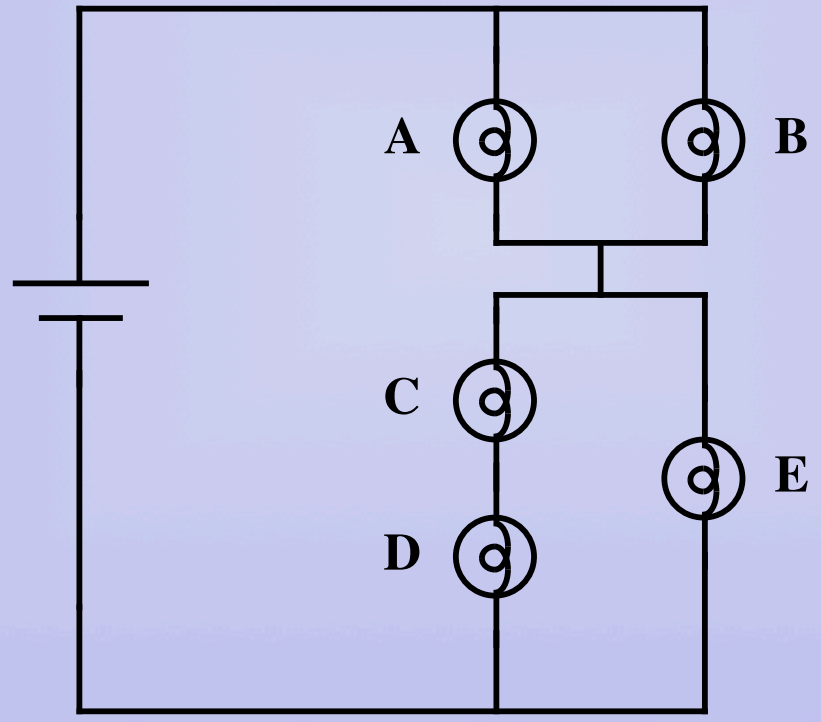

E > A = B > C = D

Application of research and teaching experience to large introductory course

Challenge

to improve student learning in standard physics courses
(constraints of large class size, breadth of coverage, and fast pace)

Need

to secure mental engagement of students
(at a sufficiently deep level)

Requirement

to develop a practical, flexible, sustainable approach
(acceptable to physics faculty)

Response

improve instruction in introductory physics through cumulative, incremental change

(evolution not revolution)

- by recognizing the constraints imposed by lecture-based courses
- by developing research-based tutorials that supplement standard instruction with a modified version of the intellectual experience provided by *Physics by Inquiry*
- by implementing weekly, small-group tutorials that foster development of reasoning ability

⇩

Tutorials in Introductory Physics

Tutorials respond to the research question:

Is standard presentation of a basic topic in textbook or lecture adequate to develop a functional understanding?

(*i.e.,* the ability to do the reasoning necessary to apply relevant concepts and principles in situations not explicitly studied)

If not,

what needs to be done?

Emphasis in tutorials is

on

- constructing concepts
- developing reasoning ability
- relating physics formalism to real world

<u>not</u> on

- solving standard quantitative problems

Context (at UW) for Tutorials

Each week:

- 3 lectures (50 minutes)
- 1 laboratory (2-3 hours)
- 1 tutorial (50 minutes)

Use can vary, depending on constraints.
(e.g., class size, room availability, number of lecturers, number of TAs or peer-instructors, etc.)

Tutorial Components

- **weekly pretests**
  - *given usually after lecture on relevant material but before tutorial*
- **tutorial sessions or interactive tutorial lectures**
  - *small groups (3-4) work through carefully structured **worksheets***
  - *tutorial instructors question students in semi-socratic manner*
- **tutorial homework**
- **examination questions**
  - *all examinations include questions as **post-tests** on tutorial topics*
- ***required weekly seminar for tutorial instructors***
  - *TA's, peer instructors, etc.*
  - *preparation in content and instructional method*

Examples in three different contexts

- Geometrical Optics
  (Ray Model)

- Electric Circuits
  (Current Model)

- Mechanics
  (Mathematical Model)

NFW Example:
a tutorial from mechanics

Pretest

Motivation for Tutorial

Investigation of student understanding of the impulse-momentum and work-energy theorems

- ***Individual Demonstration Interviews*** ***(1981 - 1984)***
  - 12 students in honors calculus-based physics
  - 16 students in algebra-based physics

  R.A. Lawson and L.C. McDermott, "Student understanding of the work-energy and impulse-momentum theorems," Am. J. Phys., ***55****, 811–817, 1987.*

- ***Descriptive Study & Curriculum Development*** ***(1991-present)***
  - 1400 students in calculus-based physics

  T. O'Brien Pride, S. Vokos, and L.C. McDermott, "The challenge of matching learning assessments to teaching goals: An example from the work-energy and impulse-momentum theorems," Am. J. Phys., ***66****,147-157, 1998.*

Apparatus used in Individual Demonstration Interviews

Pucks are pushed with constant force between starting and finishing lines by steady stream of air.

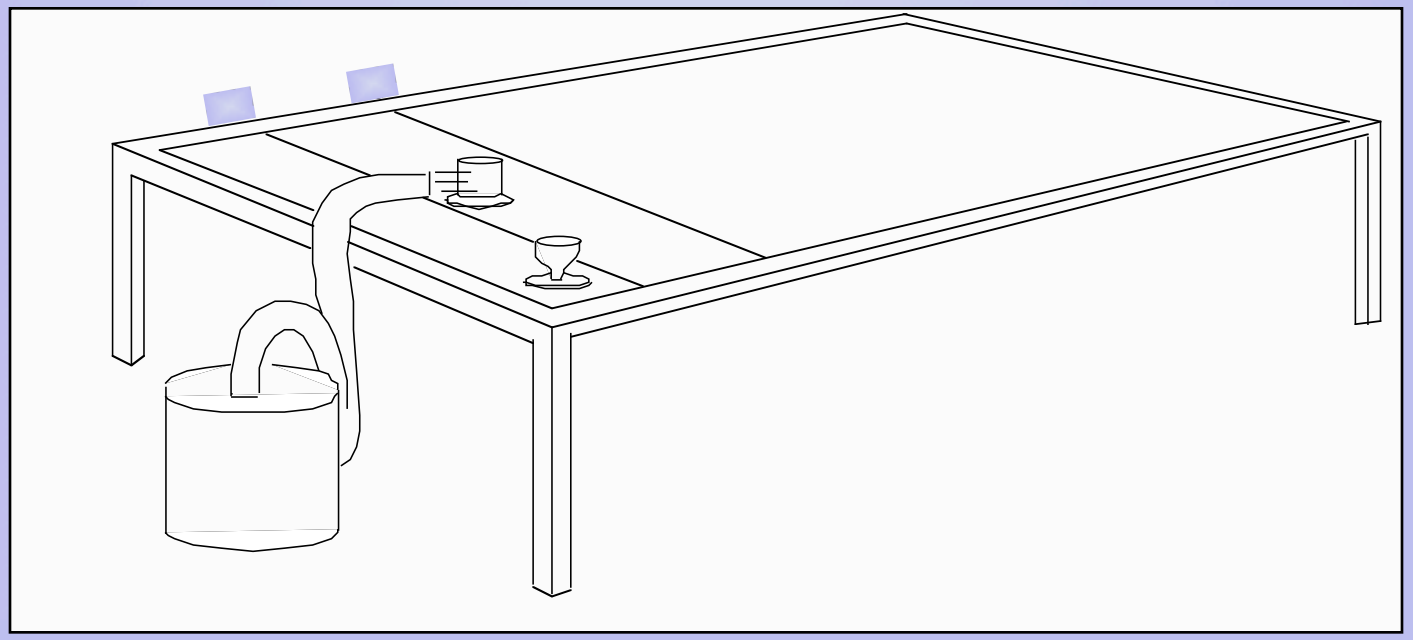

Comparison tasks

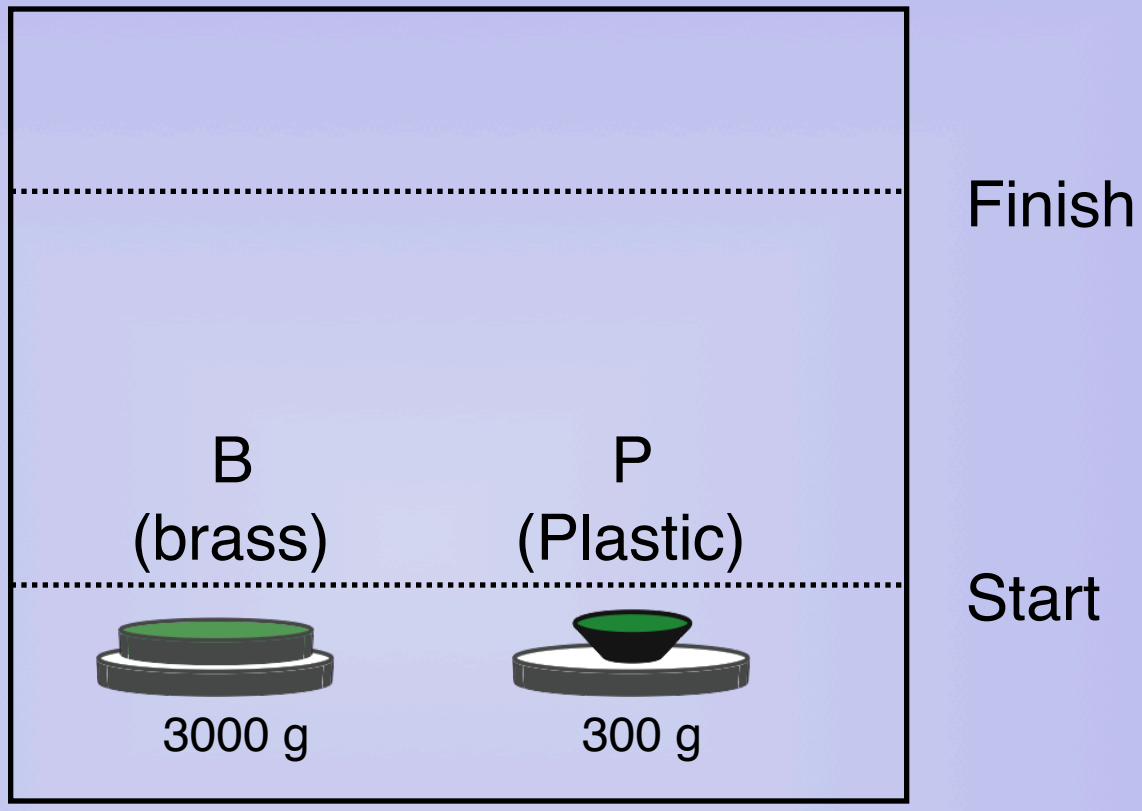

Tasks **After crossing the finish line, do the brass (B) and plastic (P) pucks have the same or different:**

- **kinetic energy?**
- **momentum?**

Criterion for understanding

Ability to apply work-energy and impulse-momentum theorems to a simple real motion

Correct Response:

$K_B = K_P$ *because* $\Delta K = F\Delta x$

$p_B > p_P$ *because* $\Delta p = F\Delta t$

Results from interview tasks and written questions

Correct explanation required
for responses to be counted as correct.

	Interviews		Written questions
Correct on:	**Honors physics (N = 12)**	**Algebra-based physics (N = 16)**	**Calculus-based physics (N = 965)**
kinetic energy comparison	**50%**	**0%**	**15%**
momentum comparison	**25%**	**0%**	**5%**

Example of intervention during interview

I: ...What ideas do you have about the term work?

S: Well, the definition that they give you is that it is the amount of force applied times the distance.

I: Okay. Is that related at all to what we've seen here? How would you apply that to what we've seen here?

S: Well, you do a certain amount of work on it for the distance between the two green lines: you are applying a force for that distance, and after that point it's going at a constant velocity with no forces acting on it.

I: Okay, so do we do the same amount of work on the two pucks or different?

S: We do the same amount.

I: Does that help us decide about the kinetic energy or the momentum?

S: Well, work equals the change in kinetic energy, so you are going from zero kinetic energy to a certain amount afterwards ... so work is done on each one …
... but the velocities and masses are different so they (the kinetic energies) are not necessarily the same.

Incomplete causal reasoning

- **Short responses (even if correct) do not necessarily indicate understanding.**

  There is a need for probing.

Incorrect Comparison
Incorrect Reasoning

$m_P < m_B$

same Δx

$p_P = p_B$ *(instead of* $p_P < p_B$*)*

Common incorrect explanations:

- *compensation:* (small m) • (large v) = (large m) • (small v)
- *'momentum is conserved' (memorized rule)*
- *same* F *so* same momentum (and same kinetic energy)

$K_P > K_B$ *(instead of* $K_P = K_B$*)*

Common incorrect explanation:

- *compensation:* (small m) • (large v^2) > (large m) • (small v^2)

Correct Comparison
Incorrect Reasoning

$m_P < m_B$

same Δx

$K_P = K_B$

Common incorrect explanations

- compensation: (small m) • (large v^2) = (large m) • (small v^2)
- *'energy is conserved'* (memorized rule)
- *same* F *so same kinetic energies*

***Right* answers for *wrong* reasons**

Compensation arguments often used by students

Theorems treated as mathematical identities

Cause-effect relationships not understood

Need for tutorial on work-energy and impulse-momentum theorems

Workshop (tomorrow):

Example of a research-based tutorial

Changes in energy and momentum

Generalizations on *learning* and *teaching*

— have been inferred and validated by research and development of

Physics by Inquiry and

Tutorials in Introductory Physics

— have served as practical guide in our iterative process of curriculum development. They are illustrated in the context of physical optics in the Oersted Medal paper on the DVD.

- **Connections among concepts, formal representations** (algebraic, diagrammatic, graphical, etc.) **and the real world are often lacking after traditional instruction.**

Students need repeated practice in interpreting physics formalism and relating it to the real world.

- **Certain conceptual difficulties are not overcome by traditional instruction. (Advanced study may not increase student understanding of basic concepts.)**

  Persistent conceptual difficulties must be explicitly addressed.

- **A coherent conceptual framework is not typically an outcome of traditional instruction.**

Students need to go through the reasoning involved in the process of constructing scientific models and applying them to predict and to explain real world phenomena.

- **Teaching by telling is an ineffective mode of instruction for most students.**

  Teaching by questioning can be more effective.

  Students must be intellectually active to develop a functional understanding.

- **Facility in solving standard quantitative problems is not an adequate criterion for functional understanding.**

Questions that require qualitative reasoning and verbal explanation are essential for assessing student learning and are an effective strategy for helping students learn.

- **Growth in reasoning ability often does not result from traditional instruction.**

Scientific reasoning skills must be expressly cultivated.

The tutorials are an example of how, with a small time allotment, a *research-based* and *research-validated* curriculum can help develop the type of qualitative understanding that can:

- make physics meaningful for students
- provide a foundation for quantitative problem solving
- develop ability in scientific reasoning

For most students, the most important intellectual benefit from introductory physics is the development of scientific reasoning ability.